FILE NO. Standard-SSV

REV.	DESCRIPTION	DWN	CHK	APP
2	REDRAWN INTO AUTOCAD FORMAT DATE: Jul/01/2007	KB3	JDM	HA

DWG REFERENCE

ROHN PRODUCTS
6718 WEST PLANK ROAD
PEORIA, IL 61604
TOLL FREE 800-727-ROHN

THIS DRAWING IS THE PROPERTY OF ROHN, IT IS NOT TO BE REPRODUCED, COPIED, OR TRACED IN WHOLE OR IN PART WITHOUT OUR WRITTEN CONSENT.

STANDARD SECTIONS
TYPICAL ASSY 400' MODEL SSMW TWR

DWN: OH | CHK'D: TWS | DATE: Jan/15/1975
ENG'R: CW
DRAWING NO: D750003 | REV: 2

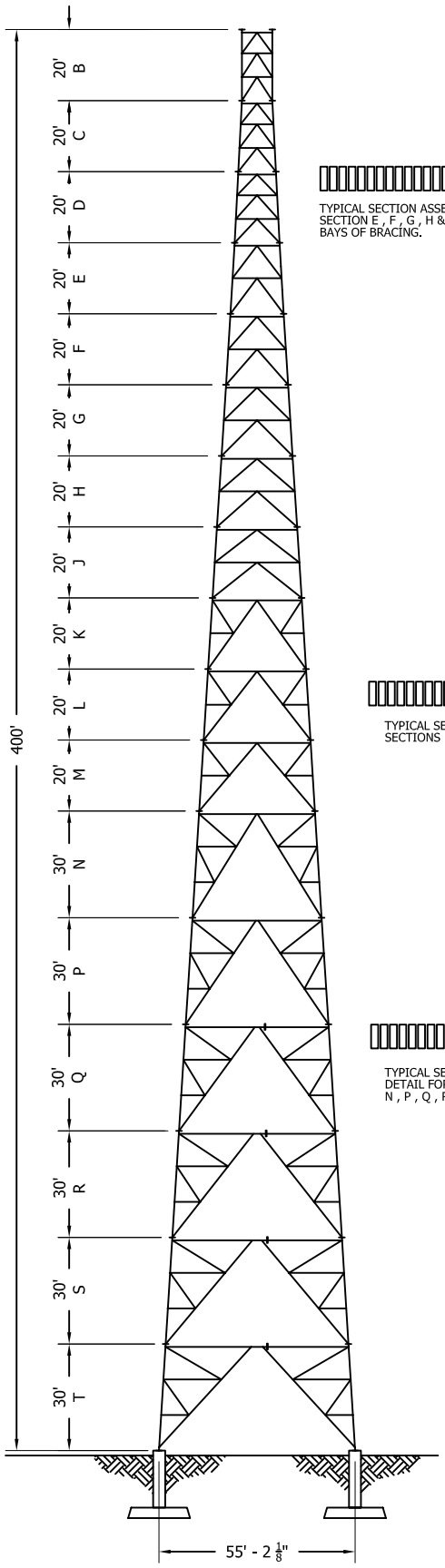

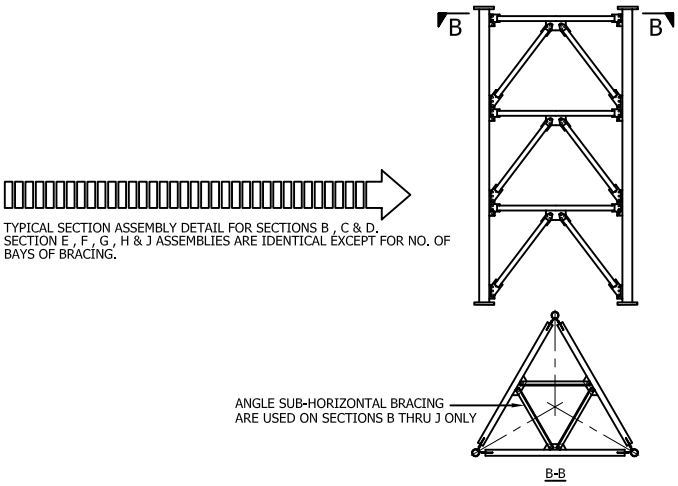

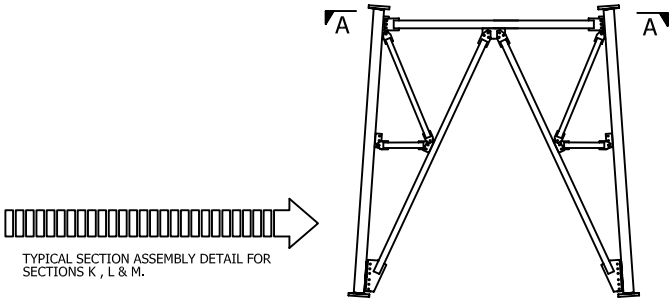

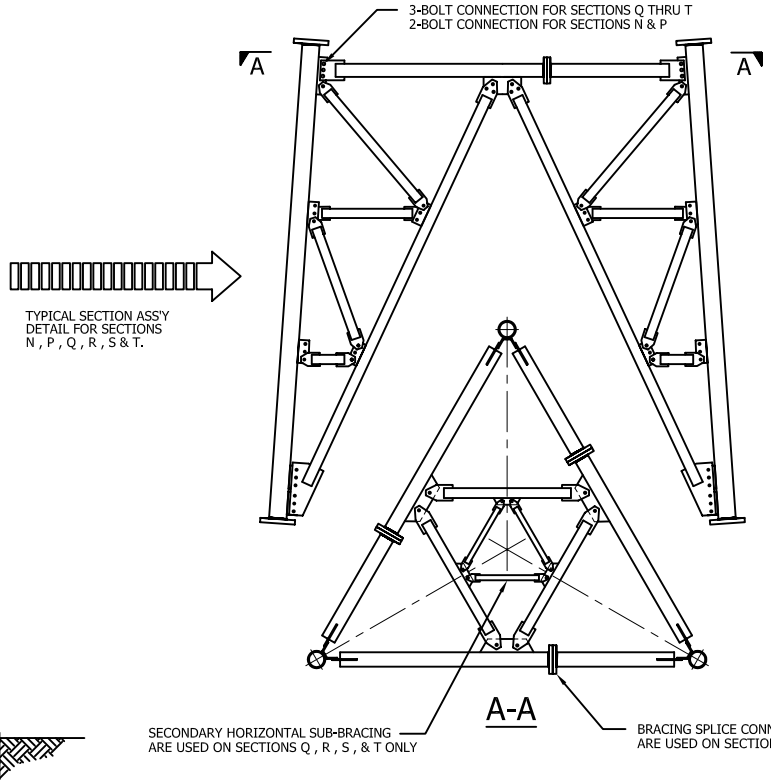

NOTE : TOWER MEMBERS COMPOSED OF THE FOLLOWING SHAPES:
TOWER LEGS - ALL PIPE MEMBERS
TOWER BRACING - PIPE, TUBE & ANGLE MEMBERS